SERVICE & OPERATING MANUAL

Original Instructions

Certified Quality

CE

SAI GLOBAL

ISO 9001 Certified
ISO 14001 Certified

Member of: Hydraulic INSTITUTE

EAC

Model T20

Food Processing Metallic
Design Level 1

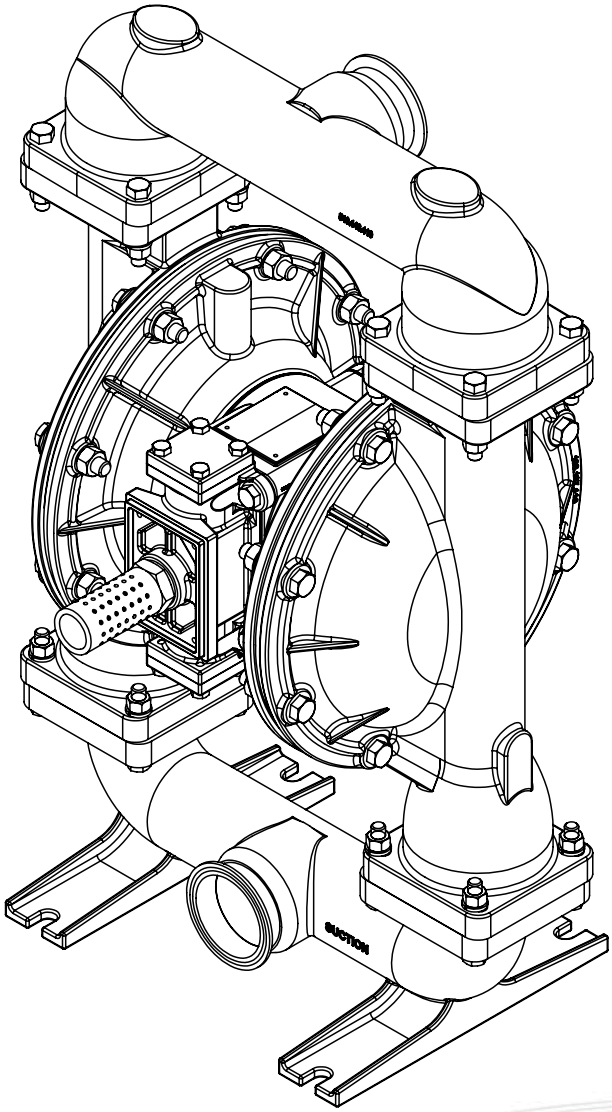

Warren Rupp, Inc.
A Unit of IDEX Corporation
800 N. Main St.,
Mansfield, Ohio 44902 USA
Telephone 419.524.8388
Fax 419.522.7867
SANDPIPERPUMP.COM

IDEX

© Copyright 2017 Warren Rupp, Inc.
All rights reserved

SANDPIPER®
A WARREN RUPP, INC. BRAND
SANDPIPERPUMP.COM

Safety Information

⚠ IMPORTANT

Read the safety warnings and instructions in this manual before pump installation and start-up. Failure to comply with the recommendations stated in this manual could damage the pump and void factory warranty.

When the pump is used for materials that tend to settle out or solidify, the pump should be flushed after each use to prevent damage. In freezing temperatures the pump should be completely drained between uses.

⚠ CAUTION

Before pump operation, inspect all fasteners for loosening caused by gasket creep. Retighten loose fasteners to prevent leakage. Follow recommended torques stated in this manual.

Nonmetallic pumps and plastic components are not UV stabilized. Ultraviolet radiation can damage these parts and negatively affect material properties. Do not expose to UV light for extended periods of time.

WARNING
Pump not designed, tested or certified to be powered by compressed natural gas. Powering the pump with natural gas will void the warranty.

WARNING
The use of non-OEM replacement parts will void (or negate) agency certifications, including CE, ATEX, CSA, 3A and EC1935 compliance (Food Contact Materials). Warren Rupp, Inc. cannot ensure nor warrant non-OEM parts to meet the stringent requirements of the certifying agencies.

⚠ WARNING

When used for toxic or aggressive fluids, the pump should always be flushed clean prior to disassembly.

Before maintenance or repair, shut off the compressed air line, bleed the pressure, and disconnect the air line from the pump. Be certain that approved eye protection and protective clothing are worn at all times. Failure to follow these recommendations may result in serious injury or death.

Airborne particles and loud noise hazards. Wear eye and ear protection.

In the event of diaphragm rupture, pumped material may enter the air end of the pump, and be discharged into the atmosphere. If pumping a product that is hazardous or toxic, the air exhaust must be piped to an appropriate area for safe containment.

Take action to prevent static sparking. Fire or explosion can result, especially when handling flammable liquids. The pump, piping, valves, containers and other miscellaneous equipment must be properly grounded.

This pump is pressurized internally with air pressure during operation. Make certain that all fasteners are in good condition and are reinstalled properly during reassembly.

Use safe practices when lifting

Grounding ATEX Pumps

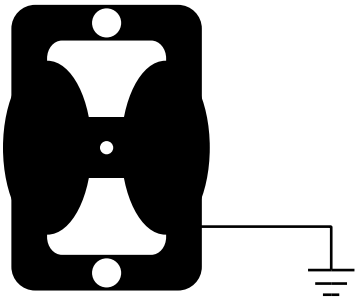

ATEX compliant pumps are suitable for use in explosive atmospheres when the equipment is properly grounded in accordance with local electrical codes. Pumps equipped with electrically conductive diaphragms are suitable for the transfer of conductive or non-conductive fluids of any explosion group. When operating pumps equipped with non-conductive diaphragms that exceed the maximum permissible projected area, as defined in EN 13463-1: 2009 section 6.7.5 table 9, the following protection methods must be applied:

- Equipment is always used to transfer electrically conductive fluids or
- Explosive environment is prevented from entering the internal portions of the pump, i.e. dry running

For further guidance on ATEX applications, please consult the factory.

Table of Contents

SECTION 1: PUMP SPECIFICATIONS.....1
- Explanation of Nomenclature
- Performance
- Materials
- Dimensional Drawings

SECTION 2: INSTALLATION & OPERATION.....4
- Principle of Pump Operation
- Recommended Installation Guide
- Troubleshooting Guide

SECTION 3: EXPLODED VIEW.....7
- Composite Repair Parts Drawing
- Composite Repair Parts List
- Material Codes

SECTION 4: AIR END.....10
- Air Distribution Valve Assembly
- Air Valve with Stroke Indicator Assembly
- Pilot Valve Assembly
- Intermediate Assembly

SECTION 5: WET END 13
- Diaphragm Drawings
- Diaphragm Servicing

SECTION 7: WARRANTY & CERTIFICATES 15
- Warranty
- CE Declaration of Conformity - Machinery
- CE Declaration of Conformity - EC Regulation 1935/2004/EC

Explanation of Pump Nomenclature

Your Model #: T
(fill in from pump nameplate)

Pump Brand	Pump Size	Check Valve	Design Level	Wetted Material	Diaphragm/ Check Valve	Check Valve Seat	Non-Wetted Material	Porting Options	Pump Style	Muffler Options	Pump Options
Model #: T	XX	X	X	X	X	X	X	X	X	X	XX

Pump Brand
T Food Processing

Pump Size
20 2"

Check Valve Type
B **Ball**

Design Level
1 Design Level

Wetted Material
S Stainless Steel

Diaphragm/Check Valve Materials
***A** PTFE - FDA Nitrile/PTFE
***D** FDA Santoprene/FDA Santoprene
F FDA Nitrile/FDA Nitrile

Check Valve Seat
S Stainless Steel
T PTFE
Z PTFE One-Piece Bonded Synthesis Diaphragm / PTFE

*Model equipped with these options are compliant with the traceability requirements of EC Regulation 1935/2004/EC.

Non-Wetted Material Options
S Stainless Steel w/Stainless Steel Hardware
W White Epoxy Coated Aluminum w/Stainless Steel Hardware

Porting Options
T 2 1/2" Sanitary Clamp Fitting

Pump Style
S Standard

Muffler Options
0 None
6 Metal Muffler

Pump Options
0 None

Your Serial #: *(fill in from pump nameplate)* _____

Performance

T20 METALLIC

SUCTION/DISCHARGE PORT SIZE
- 2 1/2" Sanitary Clamp

CAPACITY
- 0 to 200 gallons per minute (0 to 758 liters per minute)

AIR DISTRIBUTION VALVE
- No-lube, no-stall design

SOLIDS-HANDLING
- Up to .25 in. (6mm)

HEADS UP TO
- 125 psi or 289 ft. of water (8.6 Kg/cm^2 or 86 meters)

DISPLACEMENT/STROKE
- .46 Gallon / 1.7 liter

MAXIMUM OPERATING PRESSURE
- 125 psi (8.6 bar)

SHIPPING WEIGHT
- Stainless Steel 114 lbs. (52kg)

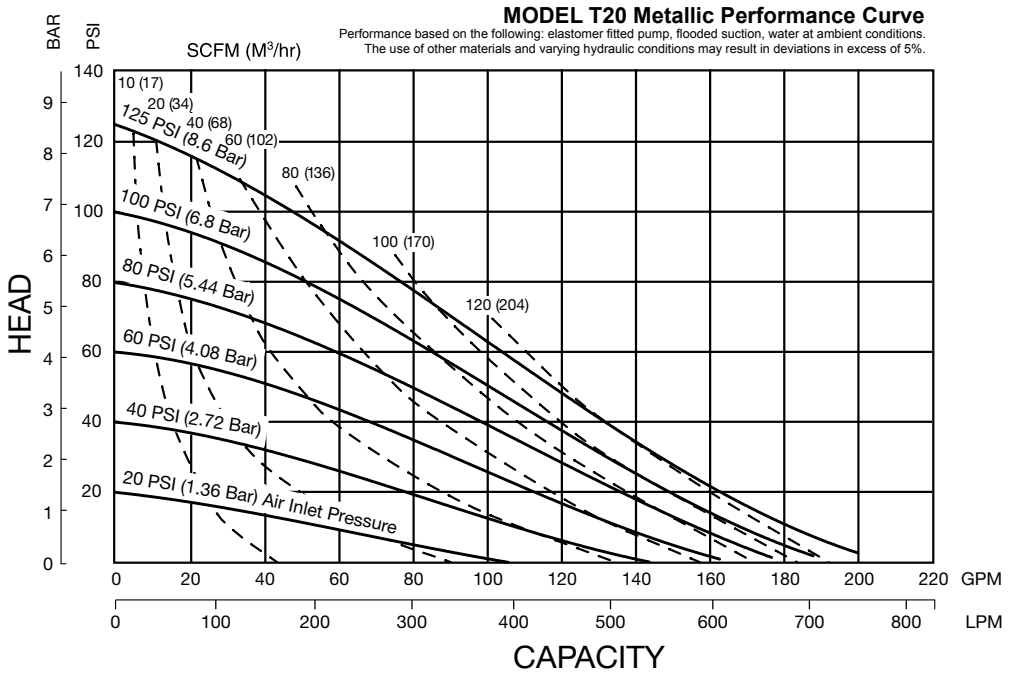

Materials

Material Profile:	Operating Temperatures:	
⚠ *CAUTION! Operating temperature limitations are as follows:*	Max.	Min.
Nitrile: General purpose, oil-resistant. Shows good solvent, oil, water and hydraulic fluid resistance. Should not be used with highly polar solvents like acetone and MEK, ozone, chlorinated hydrocarbons and nitro hydrocarbons.	190°F 88°C	-10°F -23°C
Santoprene®: Injection molded thermoplastic elastomer with no fabric layer. Long mechanical flex life. Excellent abrasion resistance.	275°F 135°C	-40°F -40°C
Virgin PTFE: (PFA/TFE) Chemically inert, virtually impervious. Very few chemicals are known to chemically react with PTFE; molten alkali metals, turbulent liquid or gaseous fluorine and a few fluoro-chemicals such as chlorine trifluoride or oxygen difluoride which readily liberate free fluorine at elevated temperatures.	220°F 104°C	-35°F -37°C
Maximum and Minimum Temperatures are the limits for which these materials can be operated. Temperatures coupled with pressure affect the longevity of diaphragm pump components. Maximum life should not be expected at the extreme limits of the temperature ranges.		

Metals:

Stainless Steel: Equal to or exceeding ASTM specification A743 CF-8M for corrosion resistant iron chromium, iron chromium nickel and nickel based alloy castings for general applications. Commonly referred to as 316 Stainless Steel in the pump industry.

For specific applications, always consult the Chemical Resistance Chart.

Dimensional Drawings

T20 Metallic

The dimensions on this drawing are for reference only. A certified drawing can be requested if physical dimensions are needed.

Dimensions in Inches
Dimensional Tolerance: ± 1/8" (± 3mm)

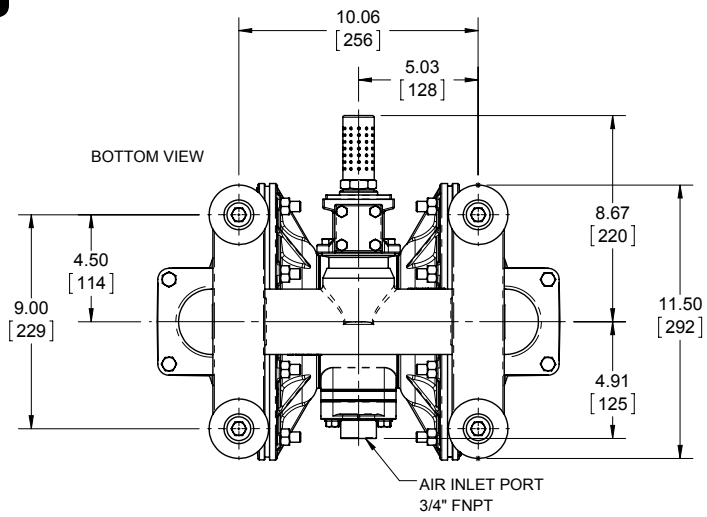

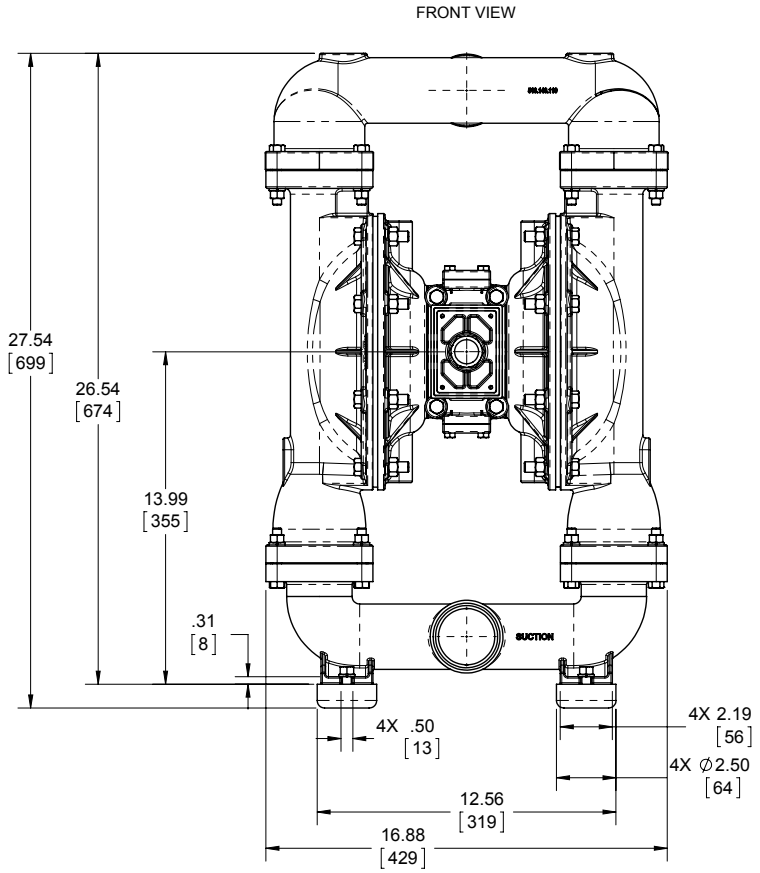

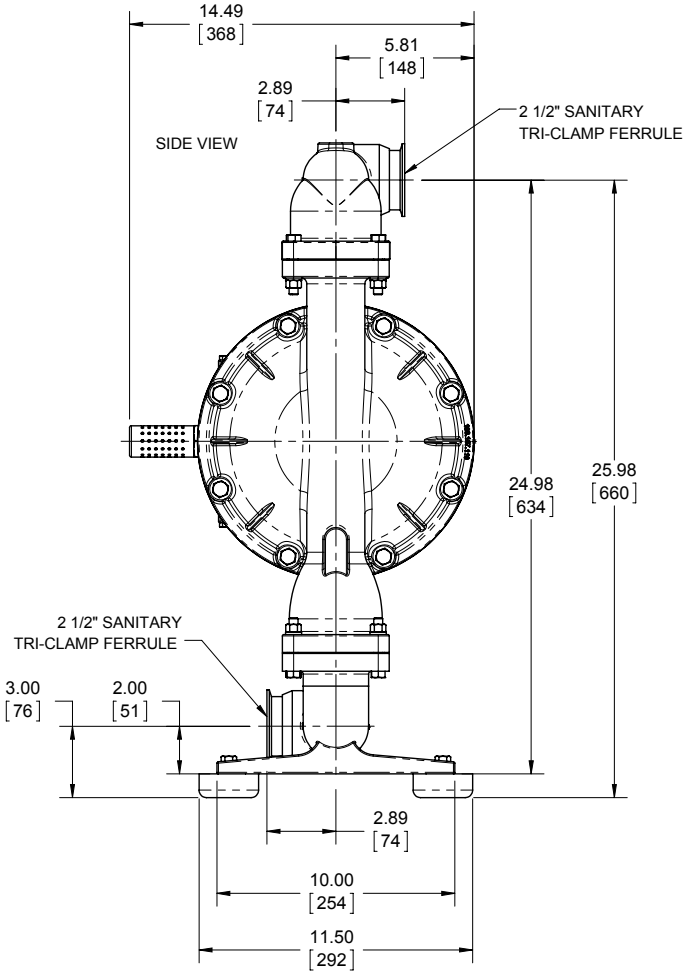

Principle of Pump Operation

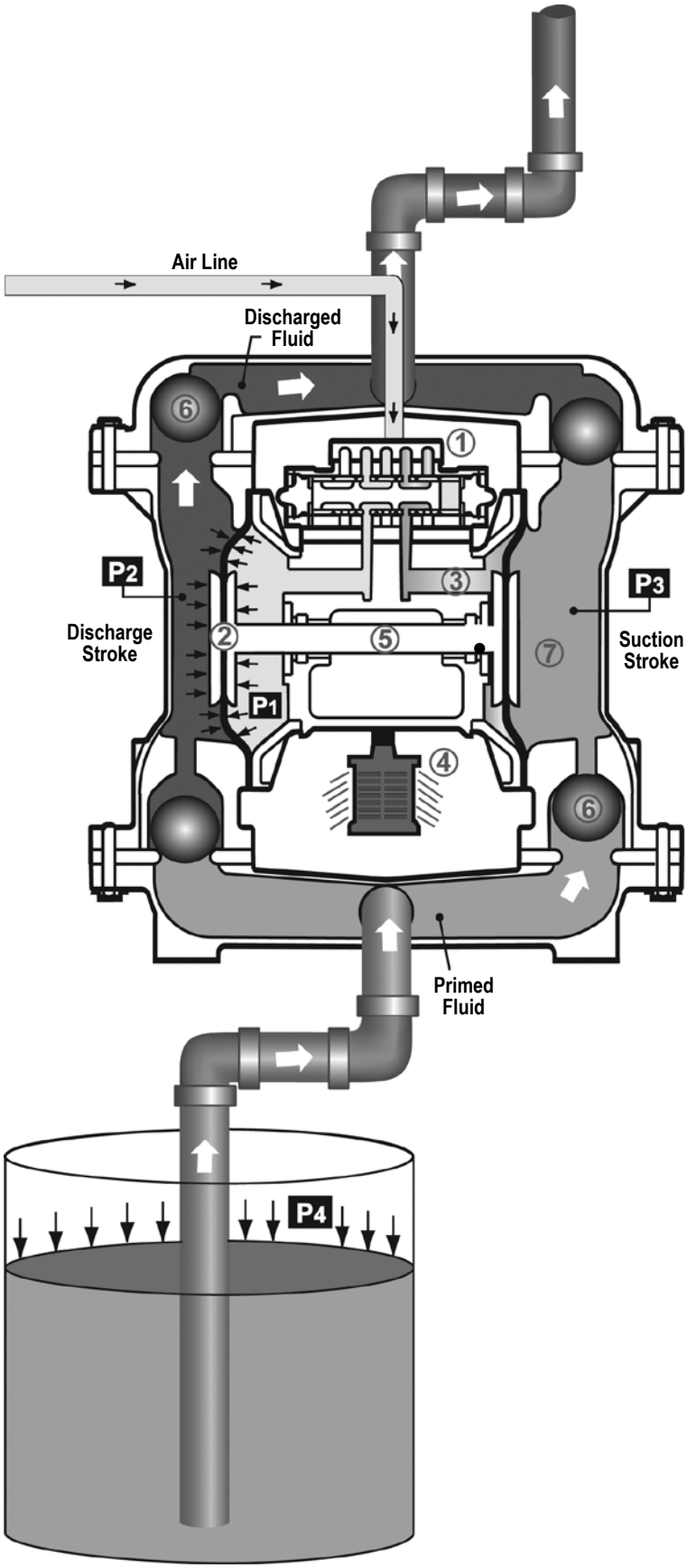

Air-Operated Double Diaphragm (AODD) pumps are powered by compressed air or nitrogen.

The main directional (air) control valve ① distributes compressed air to an air chamber, exerting uniform pressure over the inner surface of the diaphragm ②. At the same time, the exhausting air ③ from behind the opposite diaphragm is directed through the air valve assembly(s) to an exhaust port ④.

As inner chamber pressure **(P1)** exceeds liquid chamber pressure **(P2)**, the rod ⑤ connected diaphragms shift together creating discharge on one side and suction on the opposite side. The discharged and primed liquid's directions are controlled by the check valves (ball or flap)⑥ orientation.

The pump primes as a result of the suction stroke. The suction stroke lowers the chamber pressure **(P3)** increasing the chamber volume. This results in a pressure differential necessary for atmospheric pressure **(P4)** to push the fluid through the suction piping and across the suction side check valve and into the outer fluid chamber ⑦.

Suction (side) stroking also initiates the reciprocating (shifting, stroking or cycling) action of the pump. The suction diaphragm's movement is mechanically pulled through its stroke. The diaphragm's inner plate makes contact with an actuator plunger aligned to shift the pilot signaling valve. Once actuated, the pilot valve sends a pressure signal to the opposite end of the main directional air valve, redirecting the compressed air to the opposite inner chamber.

SUBMERGED ILLUSTRATION

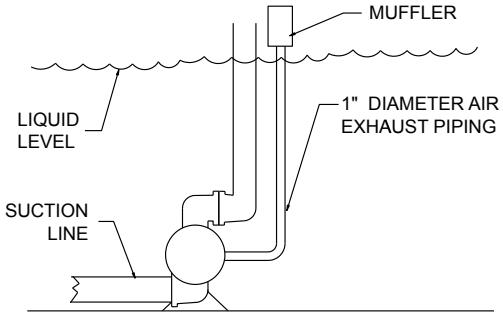

Pump can be submerged if the pump materials of construction are compatible with the liquid being pumped. The air exhaust must be piped above the liquid level. When the pumped product source is at a higher level than the pump (flooded suction condition), pipe the exhaust higher than the product source to prevent siphoning spills.

Recommended Installation Guide

Available Accessories:

1. Surge Suppressor
2. Filter/Regulator
3. Air Dryer

Note: Surge Suppressor and Piping must be supported after the flexible connection

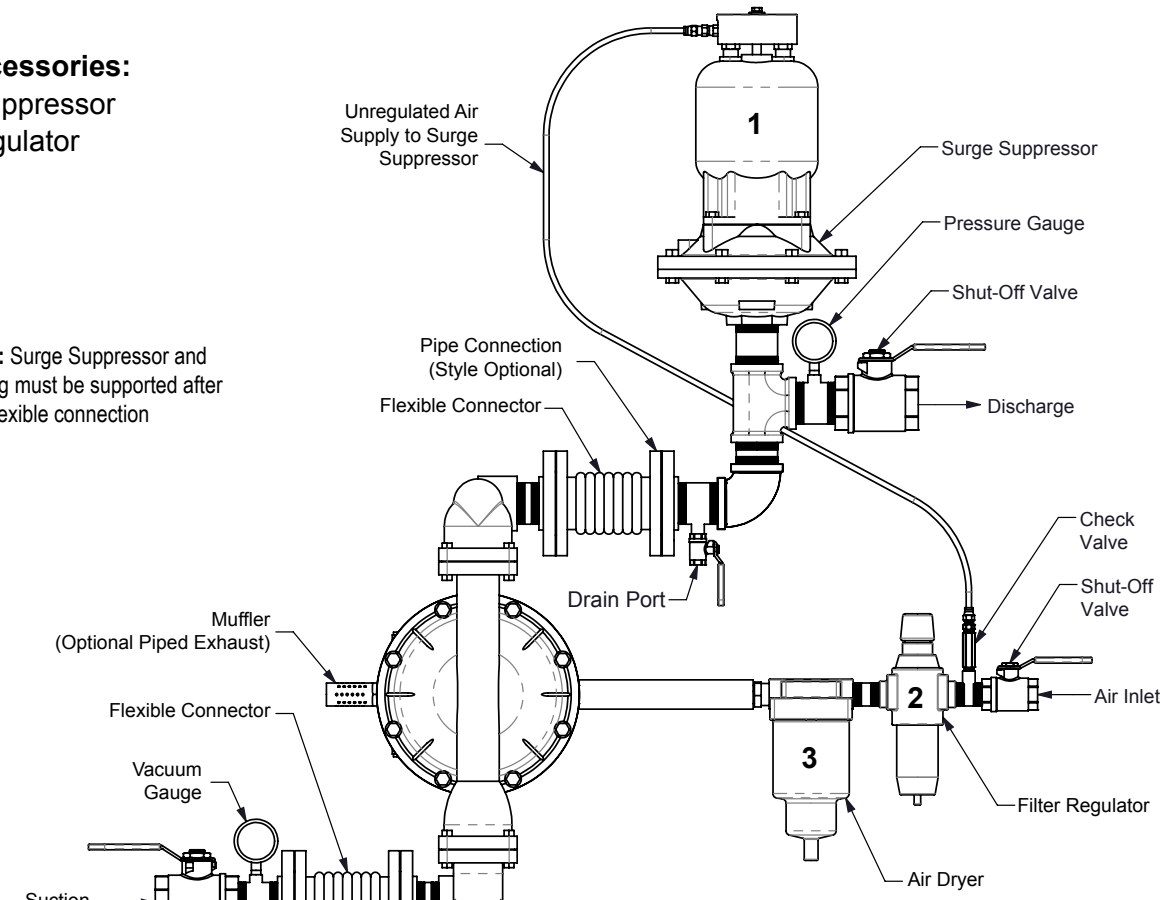

CAUTION

The air exhaust should be piped to an area for safe disposition of the product being pumped, in the event of a diaphragm failure.

Installation And Start-Up

Locate the pump as close to the product being pumped as possible. Keep the suction line length and number of fittings to a minimum. Do not reduce the suction line diameter.

Air Supply

Connect the pump air inlet to an air supply with sufficient capacity and pressure to achieve desired performance. A pressure regulating valve should be installed to insure air supply pressure does not exceed recommended limits.

Air Valve Lubrication

The air distribution system is designed to operate WITHOUT lubrication. This is the standard mode of operation. If lubrication is desired, install an air line lubricator set to deliver one drop of SAE 10 non-detergent oil for every 20 SCFM (9.4 liters/sec.) of air the pump consumes. Consult the Performance Curve to determine air consumption.

Air Line Moisture

Water in the compressed air supply may cause icing or freezing of the exhaust air, causing the pump to cycle erratically or stop operating. Water in the air supply can be reduced by using a point-of-use air dryer.

Air Inlet And Priming

To start the pump, slightly open the air shut-off valve. After the pump primes, the air valve can be opened to increase air flow as desired. If opening the valve increases cycling rate, but does not increase the rate of flow, cavitation has occurred. The valve should be closed slightly to obtain the most efficient air flow to pump flow ratio.

Troubleshooting Guide

Symptom:	Potential Cause(s):	Recommendation(s):
Pump Cycles Once	Deadhead (system pressure meets or exceeds air supply pressure).	Increase the inlet air pressure to the pump. Pump is designed for 1:1 pressure ratio at zero flow. (Does not apply to high pressure 2:1 units).
	Air valve or intermediate gaskets installed incorrectly.	Install gaskets with holes properly aligned.
	Bent or missing actuator plunger.	Remove pilot valve and inspect actuator plungers.
Pump Will Not Operate / Cycle	Pump is over lubricated.	Set lubricator on lowest possible setting or remove. Units are designed for lube free operation.
	Lack of air (line size, PSI, CFM).	Check the air line size and length, compressor capacity (HP vs. CFM required).
	Check air distribution system.	Disassemble and inspect main air distribution valve, pilot valve and pilot valve actuators.
	Discharge line is blocked or clogged manifolds.	Check for inadvertently closed discharge line valves. Clean discharge manifolds/piping.
	Deadhead (system pressure meets or exceeds air supply pressure).	Increase the inlet air pressure to the pump. Pump is designed for 1:1 pressure ratio at zero flow. (Does not apply to high pressure 2:1 units).
	Blocked air exhaust muffler.	Remove muffler screen, clean or de-ice, and re-install.
	Pumped fluid in air exhaust muffler.	Disassemble pump chambers. Inspect for diaphragm rupture or loose diaphragm plate assembly.
	Pump chamber is blocked.	Disassemble and inspect wetted chambers. Remove or flush any obstructions.
Pump Cycles and Will Not Prime or No Flow	Cavitation on suction side.	Check suction condition (move pump closer to product).
	Check valve obstructed. Valve ball(s) not seating properly or sticking.	Disassemble the wet end of the pump and manually dislodge obstruction in the check valve pocket. Clean out around valve ball cage and valve seat area. Replace valve ball or valve seat if damaged. Use heavier valve ball material.
	Valve ball(s) missing (pushed into chamber or manifold).	Worn valve ball or valve seat. Worn fingers in valve ball cage (replace part). Check Chemical Resistance Guide for compatibility.
	Valve ball(s) / seat(s) damaged or attacked by product.	Check Chemical Resistance Guide for compatibility.
	Check valve and/or seat is worn or needs adjusting.	Inspect check valves and seats for wear and proper setting. Replace if necessary.
	Suction line is blocked.	Remove or flush obstruction. Check and clear all suction screens or strainers.
	Excessive suction lift.	For lifts exceeding 20' of liquid, filling the chambers with liquid will prime the pump in most cases.
	Suction side air leakage or air in product.	Visually inspect all suction-side gaskets and pipe connections.
	Pumped fluid in air exhaust muffler.	Disassemble pump chambers. Inspect for diaphragm rupture or loose diaphragm plate assembly.
Pump Cycles Running Sluggish / Stalling, Flow Unsatisfactory	Over lubrication.	Set lubricator on lowest possible setting or remove. Units are designed for lube free operation.
	Icing.	Remove muffler screen, de-ice, and re-install. Install a point of use air drier.
	Clogged manifolds.	Clean manifolds to allow proper air flow.
	Deadhead (system pressure meets or exceeds air supply pressure).	Increase the inlet air pressure to the pump. Pump is designed for 1:1 pressure ratio at zero flow. (Does not apply to high pressure 2:1 units).
	Cavitation on suction side.	Check suction (move pump closer to product).
	Lack of air (line size, PSI, CFM).	Check the air line size, length, compressor capacity.
	Excessive suction lift.	For lifts exceeding 20' of liquid, filling the chambers with liquid will prime the pump in most cases.
	Air supply pressure or volume exceeds system hd.	Decrease inlet air (press. and vol.) to the pump. Pump is cavitating the fluid by fast cycling.
	Undersized suction line.	Meet or exceed pump connections.
	Restrictive or undersized air line.	Install a larger air line and connection.
	Suction side air leakage or air in product.	Visually inspect all suction-side gaskets and pipe connections.
	Suction line is blocked.	Remove or flush obstruction. Check and clear all suction screens or strainers.
	Pumped fluid in air exhaust muffler.	Disassemble pump chambers. Inspect for diaphragm rupture or loose diaphragm plate assembly.
	Check valve obstructed.	Disassemble the wet end of the pump and manually dislodge obstruction in the check valve pocket.
	Check valve and/or seat is worn or needs adjusting.	Inspect check valves and seats for wear and proper setting. Replace if necessary.
	Entrained air or vapor lock in chamber(s).	Purge chambers through tapped chamber vent plugs. Purging the chambers of air can be dangerous.
Product Leaking Through Exhaust	Diaphragm failure, or diaphragm plates loose.	Replace diaphragms, check for damage and ensure diaphragm plates are tight.
	Diaphragm stretched around center hole or bolt holes.	Check for excessive inlet pressure or air pressure. Consult Chemical Resistance Chart for compatibility with products, cleaners, temperature limitations and lubrication.
Premature Diaphragm Failure	Cavitation.	Enlarge pipe diameter on suction side of pump.
	Excessive flooded suction pressure.	Move pump closer to product. Raise pump/place pump on top of tank to reduce inlet pressure. Install Back pressure device (Tech bulletin 41r). Add accumulation tank or pulsation dampener.
	Misapplication (chemical/physical incompatibility).	Consult Chemical Resistance Chart for compatibility with products, cleaners, temperature limitations and lubrication.
	Incorrect diaphragm plates or plates on backwards, installed incorrectly or worn.	Check Operating Manual to check for correct part and installation. Ensure outer plates have not been worn to a sharp edge.
Unbalanced Cycling	Excessive suction lift.	For lifts exceeding 20' of liquid, filling the chambers with liquid will prime the pump in most cases.
	Undersized suction line.	Meet or exceed pump connections.
	Pumped fluid in air exhaust muffler.	Disassemble pump chambers. Inspect for diaphragm rupture or loose diaphragm plate assembly.
	Suction side air leakage or air in product.	Visually inspect all suction-side gaskets and pipe connections.
	Check valve obstructed.	Disassemble the wet end of the pump and manually dislodge obstruction in the check valve pocket.
	Check valve and/or seat is worn or needs adjusting.	Inspect check valves and seats for wear and proper setting. Replace if necessary.
	Entrained air or vapor lock in chamber(s).	Purge chambers through tapped chamber vent plugs.

For additional troubleshooting tips contact After Sales Support at service.warrenrupp@idexcorp.com or 419-524-8388

Composite Repair Parts Drawing

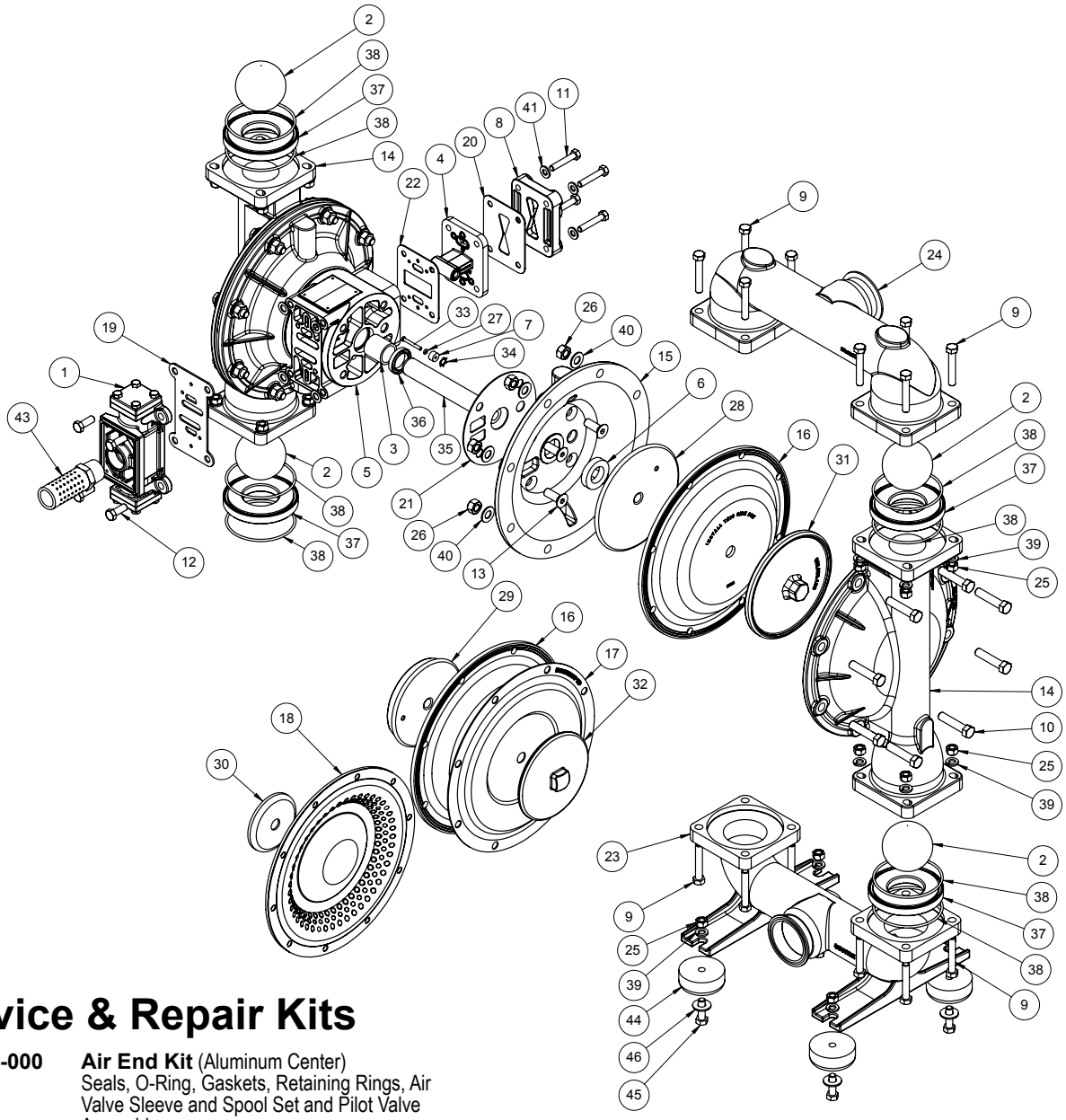

Service & Repair Kits

476-227-000 **Air End Kit** (Aluminum Center)
Seals, O-Ring, Gaskets, Retaining Rings, Air Valve Sleeve and Spool Set and Pilot Valve Assembly

476-042-351 **Wet End Kit**
FDA Santoprene Diaphragm, Balls, and PTFE Encapsulated Seals

476-042-366 **Wet End Kit**
FDA Nitrile Diaphragm, Balls, and PTFE Encapsulated Seals

476-042-666 **Wet End Kit**
FDA Nitrile Diaphragm, PTFE Overlay Balls, and PTFE Encapsulated Seals

Composite Repair Parts List

Item	Part Number	Description	Qty
1	031.183.313	Air Valve Assembly (w/ aluminum center-epoxy coated)	1
	031.179.000	Air Valve Assembly (w/ stainless center)	1
2	050.017.351	Ball, Check - Food grade Santoprene	4
	050.017.366	Ball, Check - Food grade Buna	4
	050.018.600	Ball, Check - PTFE	4
3	070.006.170	Bushing, Intermediate (included in item #5)	2
4	095.110.313	Pilot Valve Assembly (w/ aluminum center-epoxy coated)	1
	095.110.110	Pilot Valve Assembly (w/ stainless center)	1
5	114.024.313	Intermediate (w/ aluminum center-epoxy coated)	1
	114.024.110	Intermediate (w/ stainless center)	1
6	132.035.360	Bumper, Diaphragm	2
7	135.034.506	Bushing, Plunger	2
8	165.116.313	Cap, Air Inlet (w/ aluminum center-epoxy coated)	1
	165.116.110	Cap, Air Inlet (w/ stainless center)	1
9	170.052.115	Capscrew, Hx-Hd 3/8-18 X 2.25	16
10	170.060.115	Capscrew, Hx-Hd 7/16-14 x 2.00	16
11	170.069.115	Capscrew, Hx-Hd 5/16-18 x 1.75	4
12	170.006.115	Capscrew, Hx-Hd 3/8-18 X 1.00	4
	171.053.115	Capscrew, Soc-Hd 3/8-16 X 2.50 (w/ stroke indicator)	4
	*901.048.115	Washer, Flat 3/8 (use with item #12 w/ stroke indicator and stainless steel hardware) not shown	4
13	171.059.115	Capscrew, Soc-Flat Hd 7/16-14 x 1.25	8
14	196.167.110	Chamber, Outer (w/ stainless wetted)	2
15	196.168.313	Chamber, Inner (w/ aluminum center-epoxy coated)	2
	196.168.110	Chamber, Inner (w/ stainless center)	2
16	286.007.351	Diaphragm - Food Grade Santoprene	2
	286.007.366	Diaphragm - Food Grade Buna	2
17	286.020.604	Diaphragm, Overlay - PTFE	2
18	286.118.000	Diaphragm, Synthesis - One Piece PTFE	2
19	360.093.360	Gasket, Air Valve	1
20	360.104.379	Gasket, Air Inlet Cap	1

Item	Part Number	Description	Qty
21	360.105.360	Gasket, Inner Chamber	2
22	360.114.360	Gasket, Pilot Valve	1
23	518.145.110TC	Manifold, Suction - 2-1/2" Sanitary Tri-clamp ferrule	1
24	518.146.110TC	Manifold, Discharge - 2-1/2" Sanitary Tri-clamp ferrule	1
25	545.005.115	Nut, Hex 3/8-16 (w/ stainless hardware)	16
26	545.007.115	Nut, Hex 7/16-14 (w/ stainless hardware)	16
27	560.001.360	O-ring	2
28	612.192.157	Plate, Inner Diaphragm (w/ aluminum center -epoxy coated)	2
	612.192.334	Plate, Inner Diaphragm (w/ stainless center)	2
29	612.195.157	Plate, Inner Diaph PTFE (w/ aluminum center -epoxy coated)	2
	612.195.334	Plate, Inner Diaph PTFE (w/ stainless center)	2
30	612.214.150	Plate, Inner Diaph (w/ Synthesis, PTFE)	2
31	612.194.110	Plate, Outer Diaphragm	2
32	612.097.110	Plate, Outer Diaph PTFE (w/ stainless wetted)	2
33	620.020.115	Plunger, Actuator	2
34	675.042.115	Ring, Retaining	2
35	685.058.120	Rod, Diaphragm 1	
36	720.004.360	Seal, Diaphragm Rod U-Cup	2
37	722.040.110	Seat, Check Ball - Stainless (used with item #38)	4
38	720.060.608	Seal, PTFE (8 qty. required with item #37)	8
	560.079.611	O-ring, PTFE Encapsulated (8 qty. required with item #37)	8
39	900.005.115	Washer, Lock 3/8"	16
40	901.022.115	Washer, Flat 7/16"	
41	901.038.115	Washer, Flat 5/16"	4
42	901.048.115	Washer, Flat 3/8"	4
43	530.033.000	Muffler, Metal	1
44	350.001.360	Foot, Rubber	4
45	170.018.115	Capscrew, HEX-HD, 3/8-16 x 1.25"	4
46	901.005.115	Washer, Flat 3/8"	4

LEGEND:

◯ = Items contained within Air End Kits

☐ = Items contianed within Wet End Kits

Note: *Kits contain components specific to the material codes.*

Material Codes - The Last 3 Digits of Part Number

000.....Assembly, sub-assembly; and some purchased items
010.....Cast Iron
015.....Ductile Iron
020.....Ferritic Malleable Iron
080.....Carbon Steel, AISI B-1112
110.....Alloy Type 316 Stainless Steel
111.....Alloy Type 316 Stainless Steel (Electro Polished)
112.....Alloy C
113.....Alloy Type 316 Stainless Steel (Hand Polished)
114.....303 Stainless Steel
115.....302/304 Stainless Steel
117.....440-C Stainless Steel (Martensitic)
120.....416 Stainless Steel (Wrought Martensitic)
148.....Hardcoat Anodized Aluminum
150.....6061-T6 Aluminum
152.....2024-T4 Aluminum (2023-T351)
155.....356-T6 Aluminum
156.....356-T6 Aluminum
157.....Die Cast Aluminum Alloy #380
158.....Aluminum Alloy SR-319
162.....Brass, Yellow, Screw Machine Stock
165.....Cast Bronze, 85-5-5-5
166.....Bronze, SAE 660
170.....Bronze, Bearing Type, Oil Impregnated
180.....Copper Alloy
305.....Carbon Steel, Black Epoxy Coated
306.....Carbon Steel, Black PTFE Coated
307.....Aluminum, Black Epoxy Coated
308.....Stainless Steel, Black PTFE Coated
309.....Aluminum, Black PTFE Coated
313.....Aluminum, White Epoxy Coated
330.....Zinc Plated Steel
332.....Aluminum, Electroless Nickel Plated
333.....Carbon Steel, Electroless Nickel Plated
335.....Galvanized Steel
337.....Silver Plated Steel
351.....Food Grade Santoprene®
353.....Geolast; Color: Black
354.....Injection Molded #203-40 Santoprene® Duro 40D +/-5; Color: RED
356.....Hytrel®
357.....Injection Molded Polyurethane
358.....Urethane Rubber (Some Applications) (Compression Mold)
359.....Urethane Rubber
360.....Nitrile Rubber Color coded: RED
363.....FKM (Fluorocarbon) Color coded: YELLOW
364.....EPDM Rubber Color coded: BLUE
365.....Neoprene Rubber Color coded: GREEN
366.....Food Grade Nitrile
368.....Food Grade EPDM
371.....Philthane (Tuftane)
374.....Carboxylated Nitrile
375.....Fluorinated Nitrile
378.....High Density Polypropylene
379.....Conductive Nitrile
408.....Cork and Neoprene
425.....Compressed Fibre
426.....Blue Gard
440.....Vegetable Fibre
500.....Delrin® 500
502.....Conductive Acetal, ESD-800
503.....Conductive Acetal, Glass-Filled
506.....Delrin® 150
520.....Injection Molded PVDF Natural color
540.....Nylon
542.....Nylon
544.....Nylon Injection Molded
550.....Polyethylene
551.....Glass Filled Polypropylene
552.....Unfilled Polypropylene
555.....Polyvinyl Chloride
556.....Black Vinyl
558.....Conductive HDPE
570.....Rulon II®
580.....Ryton®
600.....PTFE (virgin material) Tetrafluorocarbon (TFE)
603.....Blue Gylon®
604.....PTFE
606.....PTFE
607.....Envelon
608.....Conductive PTFE
610.....PTFE Encapsulated Silicon
611.....PTFE Encapsulated FKM
632.....Neoprene/Hytrel®
633.....FKM/PTFE
634.....EPDM/PTFE
635.....Neoprene/PTFE
637.....PTFE, FKM/PTFE
638.....PTFE, Hytrel®/PTFE
639.....Nitrile/TFE
643.....Santoprene®/EPDM
644.....Santoprene®/PTFE
656.....Santoprene® Diaphragm and Check Balls/EPDM Seats
661.....EPDM/Santoprene®
666.....FDA Nitrile Diaphragm, PTFE Overlay, Balls, and Seals
668.....PTFE, FDA Santoprene®/PTFE

- Delrin and Hytrel are registered tradenames of E.I. DuPont.
- Nylatron is a registered tradename of Polymer Corp.
- Gylon is a registered tradename of Garlock, Inc.
- Santoprene is a registered tradename of Exxon Mobil Corp.
- Rulon II is a registered tradename of Dixion Industries Corp.
- Ryton is a registered tradename of Phillips Chemical Co.
- Valox is a registered tradename of General Electric Co.

RECYCLING

Many components of SANDPIPER® AODD pumps are made of recyclable materials. We encourage pump users to recycle worn out parts and pumps whenever possible, after any hazardous pumped fluids are thoroughly flushed.

Air Distribution Valve Assembly

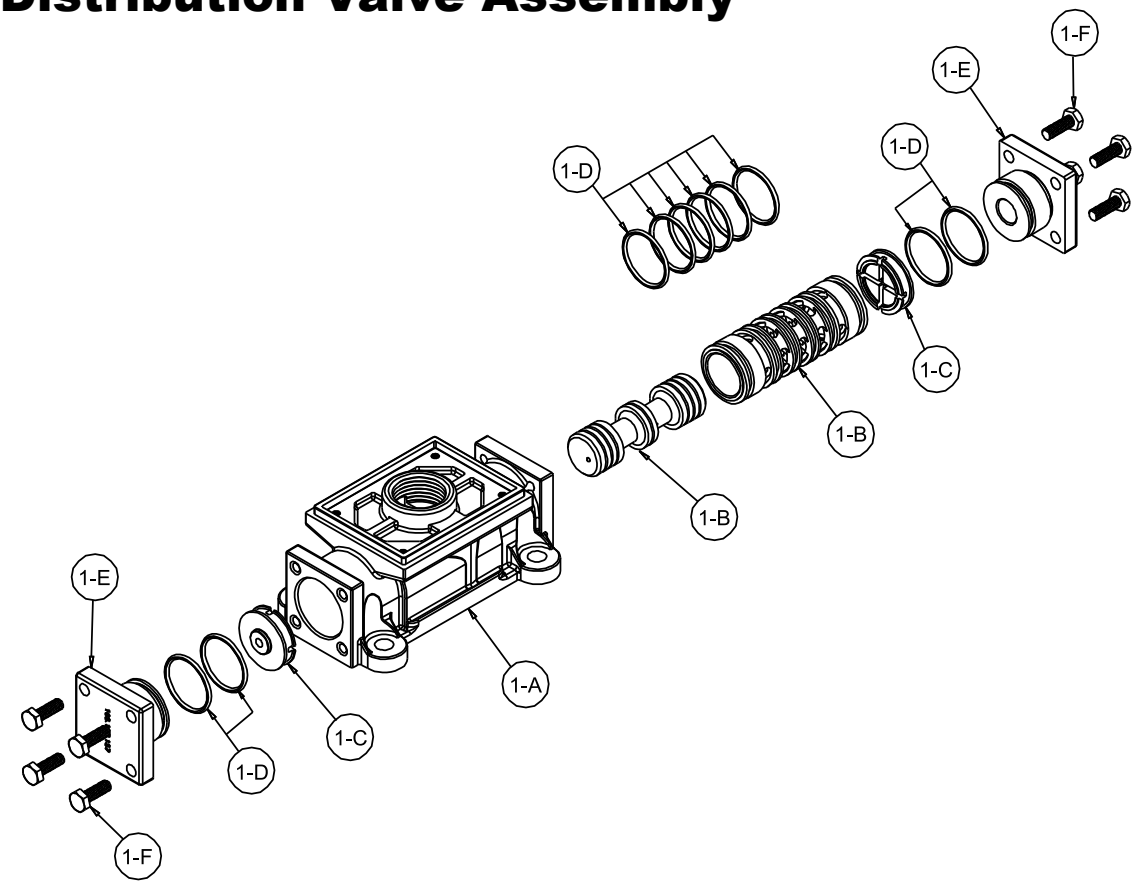

Air Distribution Valve Servicing

See repair parts drawing, remove screws.

Step 1: Remove Hex Head Cap Screws (1-F).

Step 2: Remove end cap (1-E).

Step 3: Remove spool part of (1-B) (caution: do not scratch).

Step 4: Press sleeve (1-B) from body (1-A).

Step 5: Inspect O-Ring (1-D) and replace if necessary.

Step 6: Lightly lubricate O-Rings (1-D) on sleeve (1-B).

Step 7: Press sleeve (1-B) into body (1-A).

Step 8: Reassemble in reverse order, starting with step 3.

Note: Sleeve and spool (1-B) set is match ground to a specified clearance sleeve and spools (1-B) cannot be interchanged.

IMPORTANT

Read these instructions completely, before installation and start-up. It is the responsibility of the purchaser to retain this manual for reference. Failure to comply with the recommendations stated in this manual will damage the pump, and void factory warranty.

Air Valve Assembly Parts List

(Use w/Aluminum centers only)

Item	Part Number	Description	Qty
1	**031.183.313**	**Air Valve Assembly**	**1**
1-A	095.109.313	Body, Air Valve	1
1-B	031.139.000	Sleeve and Spool Set	1
1-C	132.029.357	Bumper	2
1-D	560.020.360	O-Ring	10
1-E	165.127.313	Cap, End	2
1-F	170.032.115	Hex Head Capscrew 1/4-20 x .75	8

Air Valve Assembly Parts List

(Use w/Stainless Steel centers only)

Item	Part Number	Description	Qty
1	**031.179.000**	**Air Valve Assembly**	**1**
1-A	095.109.110	Body, Air Valve	1
1-B	031.139.000	Sleeve and Spool Set	1
1-C	132.029.357	Bumper	2
1-D	560.020.379	O-Ring	10
1-E	165.127.110	Cap, End	2
1-F	170.032.115	Hex Head Capscrew 1/4-20 x .75	8

Pilot Valve Assembly

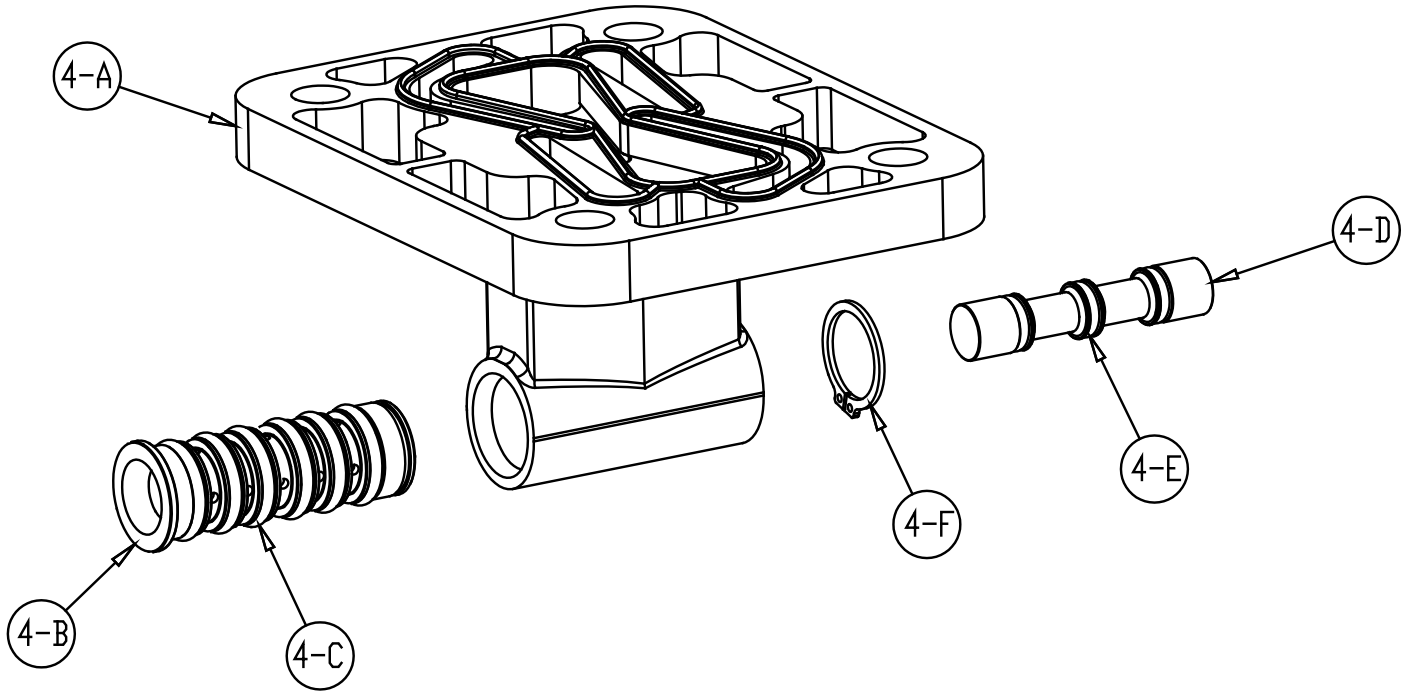

Pilot Valve Servicing

With Pilot Valve removed from pump.

Step 1: Remove snap ring (4-F).

Step 2: Remove sleeve (4-B), inspect O-Rings (4-C), replace if required.

Step 3: Remove spool (4-D) from sleeve (4-B), inspect O-Rings (4E), replace if required.

Step 4: Lightly lubricate O-Rings (4-C) and (4-E).

Reassemble in reverse order.

Pilot Valve Assembly Parts List

Item	Part Number	Description	Qty
4	095.110.313	Pilot Valve Assembly	1
4-A	095.095.313	Valve Body	1
4-B	755.051.000	Sleeve (With O-rings)	1
4-C	560.033.360	O.ring (Sleeve)	6
4-D	775.055.000	Spool (With O-rings)	1
4-E	560.023.360	O-ring (Spool)	3
4-F	675.037.080	Retaining Ring	1

For Pumps With Stainless Steel Center Section

Item	Part Number	Description	Qty
4	095.110.110	Pilot Valve Assembly	1
4-A	095.095.110	Valve Body	1

(includes all other items used on 095.110.000)

Intermediate Assembly Drawing

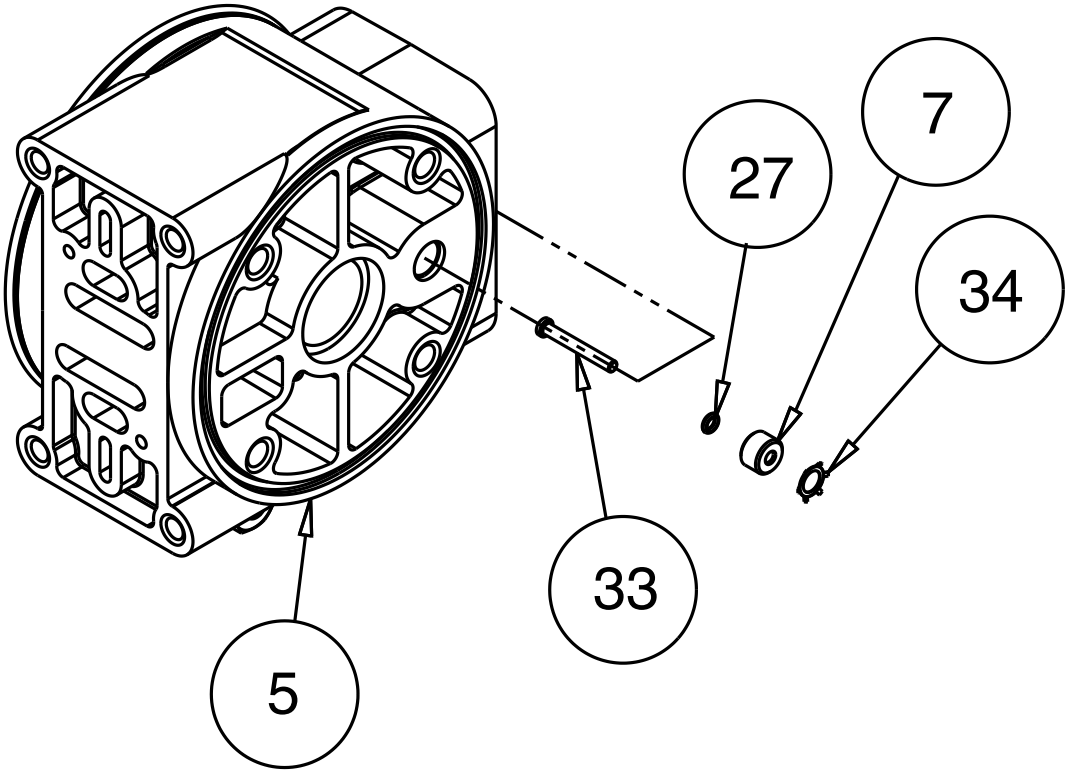

Intermediate Assembly Drawing

Step 1: Remove plunger, actuator (33) from center of intermediate pilot valve cavity.

Step 2: Remove Ring, Retaining (34), discard.

Step 3: Remove bushing, plunger (7), inspect for wear and replace if necessary with genuine parts.

Step 4: Remove O-Ring (27), inspect for wear and replace if necessary with genuine parts.

Step 5: Lightly lubricate O-Ring (27) and insert into intermediate.

Step 6: Reassemble in reverse order.

INTERMEDIATE REPAIR PARTS LIST

Item	Part Number	Description	Qty
5	114.024.313	Bracket, Intermediate	1
	114.024.110	Bracket, Intermediate	1
7	135.034.506	Bushing, Plunger	2
27	560.001.360	O-Ring	2
33	620.020.115	Plunger, Actuator	2
34	675.042.115	Ring, Retaining*	2
36	720.004.360	Seal, Diaphragm Rod	2

***Note:** It is recommended that when plunger components are serviced, new retaining rings be installed.

IMPORTANT

When the pumped product source is at a higher level than the pump (flooded suction condition), pipe the exhaust higher than the product source to prevent siphoning spills. In the event of a diaphragm failure a complete rebuild of the center section is recommended.

Diaphragm Service Drawing, with Overlay

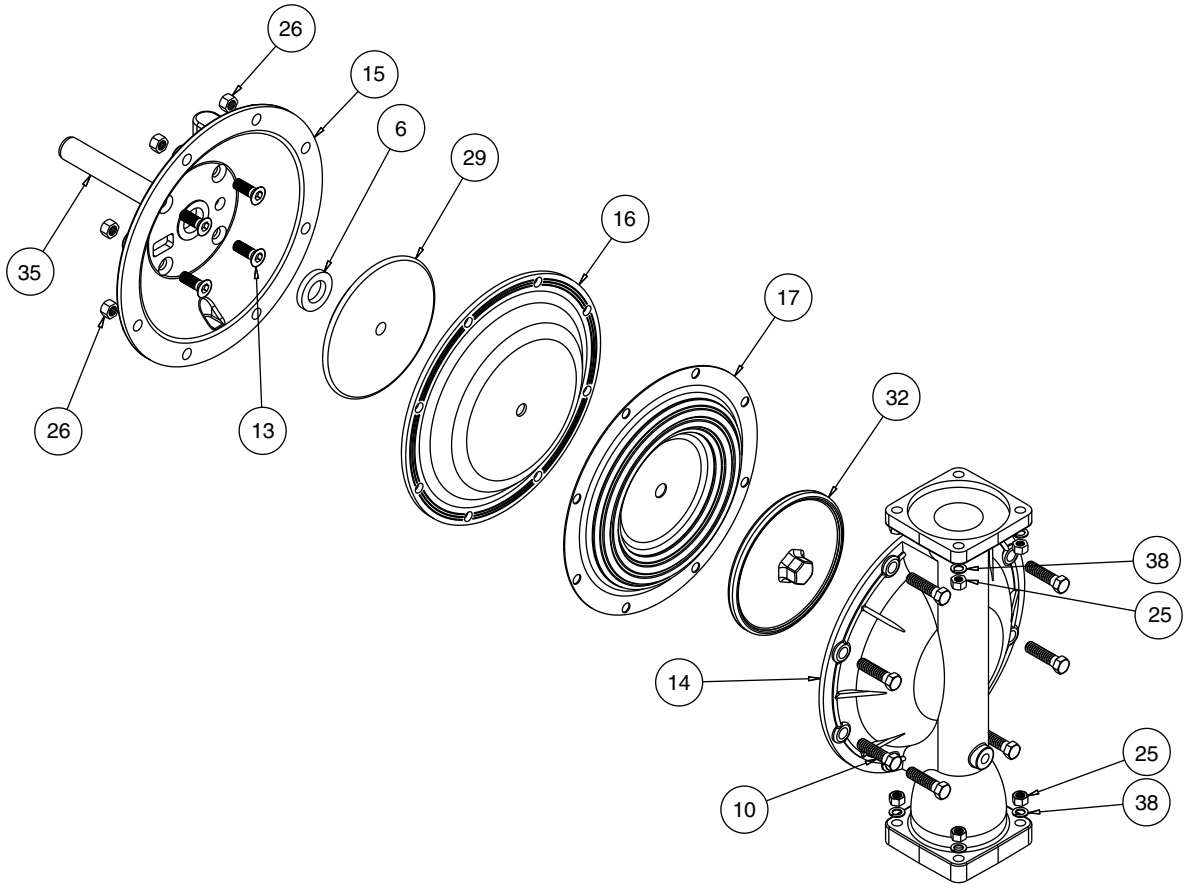

Diaphragm Service Drawing, Non-Overlay

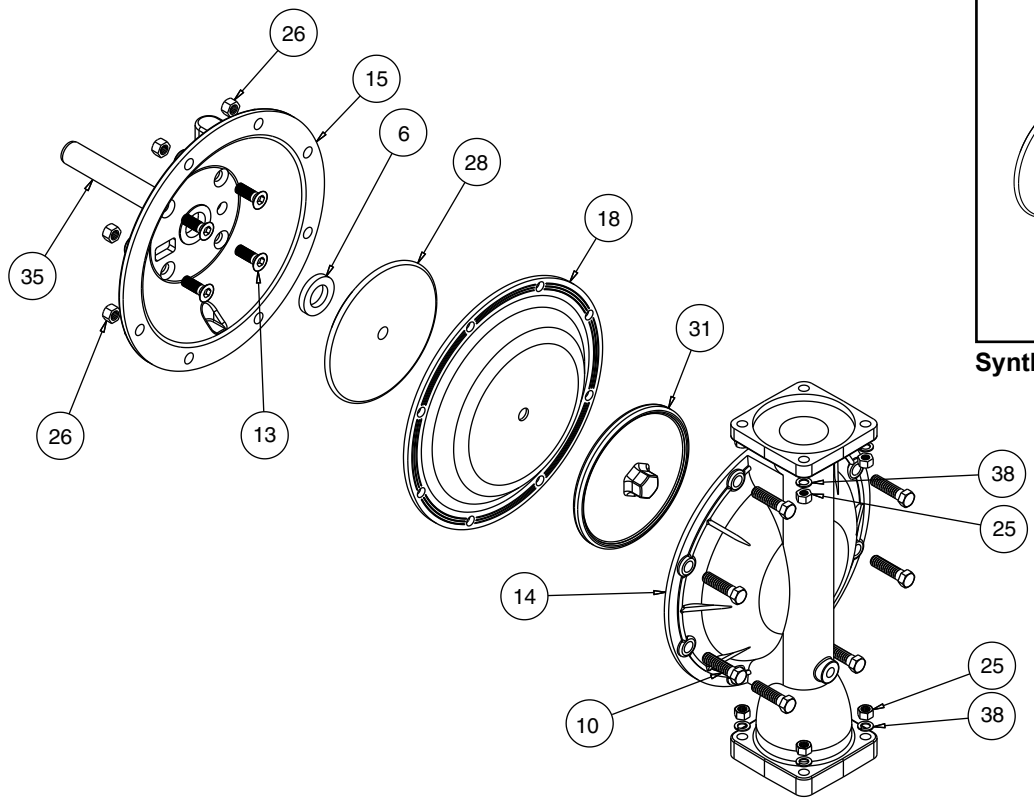

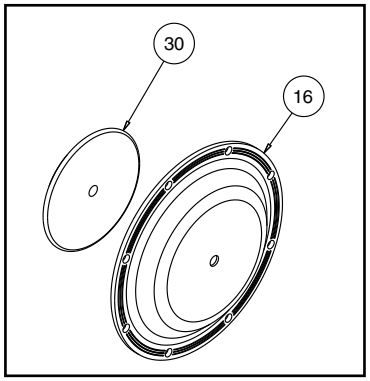

Synthesis One-Piece Option

DIAPHRAGM SERVICING

Step 1: With manifolds and outer chambers removed, remove diaphragm assemblies from diaphragm rod. **DO NOT** use a pipe wrench or similar tool to remove assembly from rod. Flaws in the rod surface may damage bearings and seal. Soft jaws in a vise are recommended to prevent diaphragm rod damage.

Step 1.A: NOTE: Not all inner diaphragm plates are threaded. Some models utilize a though hole in the inner diaphragm plate. If required to separate diaphragm assembly, place assembly in a vice, gripping on the exterior cast diameter of the inner plate. Turn the outer plate clockwise to separate the assembly.

Always inspect diaphragms for wear cracks or chemical attack. Inspect inner and outer plates for deformities, rust scale and wear. Inspect intermediate bearings for elongation and wear. Inspect diaphragm rod for wear or marks.
Clean or repair if appropriate. Replace as required.

Step 2: Reassembly: There are two different types of diaphragm plate assemblies utilized throughout the Sandpiper product line: Outer plate with a threaded stud, diaphragm, and a threaded inner plate.

Outer plate with a threaded stud, diaphragm, and an inner plate with through hole. Secure threaded inner plate in a vice. Ensure that the plates are being installed with the outer radius against the diaphragm.

Step 3: Lightly lubricate, with a compatible material, the inner faces of both outer and inner diaphragm plates when using on non Overlay diaphragms (For EPDM water is recommended). No lubrication is required.

Step 4: Push the threaded outer diaphragm plate through the center hole of the diaphragm. **Note:** Most diaphragms are installed with the natural bulge out towards the fluid side. S05, S07, and S10 non–metallic units are installed with the natural bulge in towards the air side.

Step 5: Thread or place, outer plate stud into the inner plate. For threaded inner plates use a torque wrench to tighten the assembly together. Torque values are called out on the exploded view.

Repeat procedure for second side assembly. Allow a minimum of 15 minutes to elapse after torquing then re-torque the assembly to compensate for stress relaxation in the clamped assembly.

Step 6: Thread one assembly onto the diaphragm rod with sealing washer (when used) and bumper.

Step 7: Install diaphragm rod assembly into pump and secure by installing the outer chamber in place and tightening the capscrews.

Step 8: On opposite side of pump thread the remaining assembly onto the diaphragm rod. Using a torque wrench tighten the assembly to the diaphragm rod. Align diaphragm through bolt holes always going forward past the recommended torque. Torque values are called out on the exploded view. **NEVER** reverse to align holes, if alignment cannot be achieved without damage to diaphragm, loosen complete assemblies rotate diaphragm and reassemble as described above.

Step 9: Complete assembly of entire unit.
Synthesis One Piece Diaphragm Servicing (Bonded PTFE with integral plate) The One Piece diaphragm has a threaded stud installed in the integral plate at the factory. The inner diaphragm plate has a through hole instead of a threaded hole. Place the inner plate over the diaphragm stud and thread the first diaphragm / inner plate onto the diaphragm rod only until the inner plate contacts the rod. Do not tighten. A small amount of grease may be applied between the inner plate and the diaphragm to facilitate assembly. Insert the diaphragm / rod assembly into the pump and install the outer chamber. Turn the pump over and thread the second diaphragm / inner plate onto the diaphragm rod. Turn the diaphragm until the inner plate contacts the rod and hand tighten the assembly. Continue tightening until the bolt holes align with the inner chamber holes. **DO NOT LEAVE THE ASSEMBLY LOOSE.**

⚠ IMPORTANT

Read these instructions completely, before installation and start-up. It is the responsibility of the purchaser to retain this manual for reference. Failure to comply with the recommendations stated in this manual will damage the pump, and void factory warranty.

5 - YEAR Limited Product Warranty

Warren Rupp, Inc. ("Warren Rupp") warrants to the original end-use purchaser that no product sold by Warren Rupp that bears a Warren Rupp brand shall fail under normal use and service due to a defect in material or workmanship within five years from the date of shipment from Warren Rupp's factory. Warren Rupp brands include Warren Rupp®,SANDPIPER®, SANDPIPER Signature Series™, MARATHON®, Porta-Pump®, SludgeMaster™ and Tranquilizer®.

The use of non-OEM replacement parts will void (or negate) agency certifications, including CE, ATEX, CSA, 3A and EC1935 compliance (Food Contact Materials). Warren Rupp, Inc. cannot ensure nor warrant non-OEM parts to meet the stringent requirements of the certifying agencies.

~ See sandpiperpump.com/content/warranty-certifications for complete warranty, including terms and conditions, limitations and exclusions. ~

WARREN RUPP, INC.

Declaration of Conformity

Manufacturer: Warren Rupp, Inc., 800 N. Main Street
Mansfield, Ohio, 44902 USA

Certifies that Air-Operated Double Diaphragm Pump Series: HDB, HDF, M Non-Metallic, S Non-Metallic, M Metallic, S Metallic, T Series, G Series, U Series, EH and SH High Pressure, RS Series, W Series, SMA and SPA Submersibles, and Tranquilizer® Surge Suppressors comply with the European Community Directive 2006/42/EC on Machinery, according to Annex VIII. This product has used Harmonized Standard EN809:1998+A1:2009, Pumps and Pump Units for Liquids - Common Safety Requirements, to verify conformance.

David Roseberry
Signature of authorized person

October 20, 2005
Date of issue

Director of Engineering
Title

February 27, 2017
Date of revision

Authorised Representative:
IDEX Pump Technologies
R79 Shannon Industrial Estate
Shannon, Co. Clare, Ireland

Attn: Barry McMahon

Revision Level: F

CE

WARREN RUPP, INC.

Declaration of Conformity

Manufacturer:
Warren Rupp, Inc., 800 N. Main Street,
Mansfield, Ohio, 44902 USA
certifies that SANDPIPER® Air-Operated Double Diaphragm Food Processing Pump Models and Tranquilizer® Surge Suppressor Models comply with the European Community Regulation 1935/2004/EC for Food Contact Materials.

Food Processing Pump Models:

T1FB1SASWTS600.	T15B1SDSWTS600.	T20B1SASWTS600.	T30B1SASWTS600.	SSB2, TD3SS.
T1FB1S9SWTS600.	T15B1SSSWTS600.	T20B1SDSWTS600.	T30B1SDSWTS600.	
T1FB1SDSWTS600.	T15B1SDSSTS600.	T20B1SASSTS600.	T30B1SASSTS600.	
T1FB1SLSWTS600.	T15B1SSSSTS600.	T20B1SDSSTS600.	T30B1SDSSTS600.	
T1FB1S9TWTS600.	T15B1SSTWTS600.			
	T15B1SSTSTS600.			

Tranquilizer® Surge Suppressors:

TA1,NG1SS	TA2,NG2SS
TA25,NG1SS	TA50,NG2SS
TA1-1/2,NG1SS	TA3,NG2SS
TA40,NG1SS	TA80,NG2SS

David Roseberry
Signature of authorized person

February 8, 2013
Date of issue

David Roseberry
Printed name of authorized person

Engineering Manager
Title

Revision Level: A

May 2, 2013
Date of revision